Vertical Separation in Utility Industries

Darryl Biggar
Consulting Economist
Australian Competition and Consumer Commission
31 July 2003

Outline

- What is vertical separation?
- Four “myths” of vertical separation in utility industries…

The basic problem

- The basic problem arises where:

(a) the provision of a complete service to end-users requires combining two complementary services

(b) one of the services is a natural monopoly and the other is competitive and;

(c) the owner of the natural monopoly facility also provides the complementary competitive service

- Note – no mention of “upstream” or “downstream” which does not necessarily make any sense here.

The basic problem

- This situation arises in a large number of utility industries
  - airports and airlines; roads and road transportation services; gas pipelines and gas producers; electricity networks and generators; rail track infrastructure and rail transportation service providers; local loop and telecommunications services providers, etc.
- This is, of course, the situation which part IIIA of the TPA is designed to address…
  - We will focus on the case where the natural monopoly is subject to rate regulation

The basic problem

- In this circumstance there can arise *incentives* for the owner of the regulated firm to prevent or restrict competition…
  - The incentive depends (amongst other things) on the relative "tightness" of the regulation of the unintegrated natural monopoly service and the integrated end-user service.
- The integrated firm has the *ability* to restrict competition through its control over access to the natural monopoly facility
  - (it can raise the price, delay, lower the quality, make use of information and so on).

What is vertical separation?

- There is a competition problem in this context, but what to do about it?
  - We can group the different policies under two headings:
- Behavioural approaches
  - Try to modify the behaviour of the regulated firm; "access regulation" (as part IIIA) is the classic example
- Structural approaches
  - Try to modify the incentives of the regulated firm, usually through structural changes
  - Vertical separation is the separation of the ownership of the essential facility or bottleneck from any firm operating in the competitive segment

What's the best approach?

- Behavioural approaches (e.g., "access regulation") work in some industries but they are not perfect
  - The regulator is constantly battling against the incentive on the regulated firm to find new ways to discriminate against its rivals (in price, delay, quality, information and so on).
  - There is some empirical evidence that the result tends to be higher prices and less competition

What's the best approach?

- Structural approaches (e.g., "vertical separation") may require the loss of some efficiencies
  - Integration can yield efficiencies such as the elimination of double marginalisation, enhanced price discrimination or reduced transactions costs
  - Defining boundary of the monopoly may be hard…
- Conclusion: No one-size-fits-all industries; Must balance pros and cons

OECD Recommendation

- OECD Recommendation on Structural Separation
  - Recommends that OECD member countries should seriously consider the pros and cons of structural approaches (relative to behavioural approaches)
  - Especially in the process of privatisation or liberalisation
    - Later separation is more difficult

Four “myths” of vertical structural separation

- Vertical separation in monopoly industries is *exceptional* or *rare* or a “*last resort*”;
- Vertical separation is *all* (full vertical ownership separation) *or nothing* at all;
- Accounting separation and corporate separation are equally effective alternatives;
- Vertical separation is always an involuntary act which must be forced on the regulated firm;

Structural approaches

- There is not just one structural approach but many…
  - Vertical ownership separation

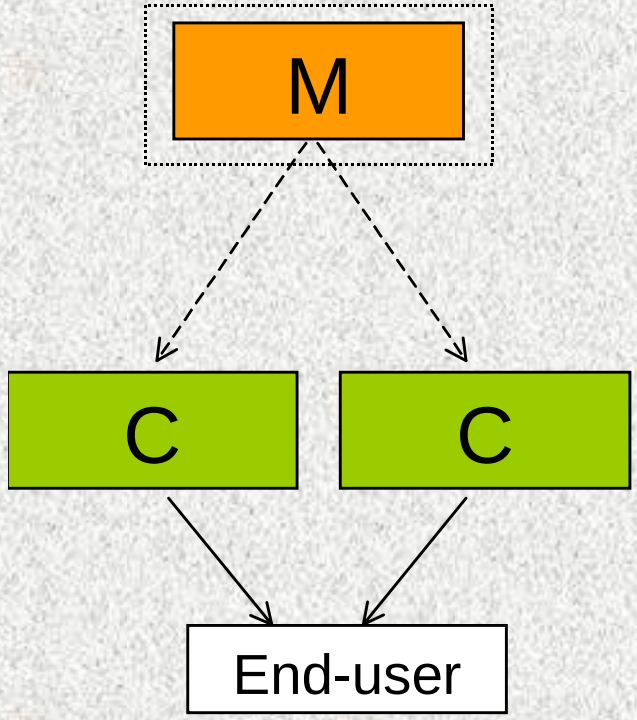

Structural approaches

- There is not just one structural approach but many…
  - Vertical ownership separation
  - Joint or club ownership

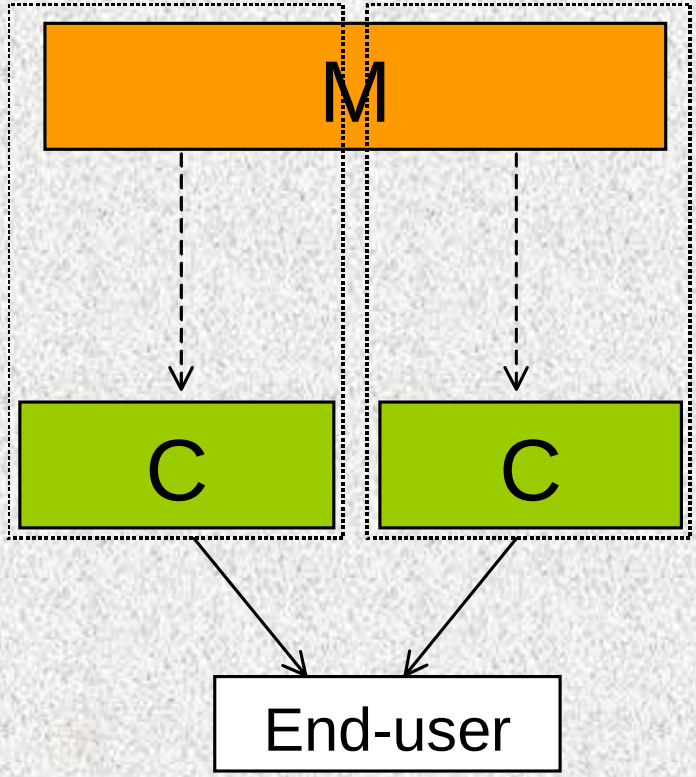

Structural approaches

- There is not just one structural approach but many…
  - Vertical ownership separation
  - Joint or club ownership
  - Sharing of the capacity of the natural monopoly facility

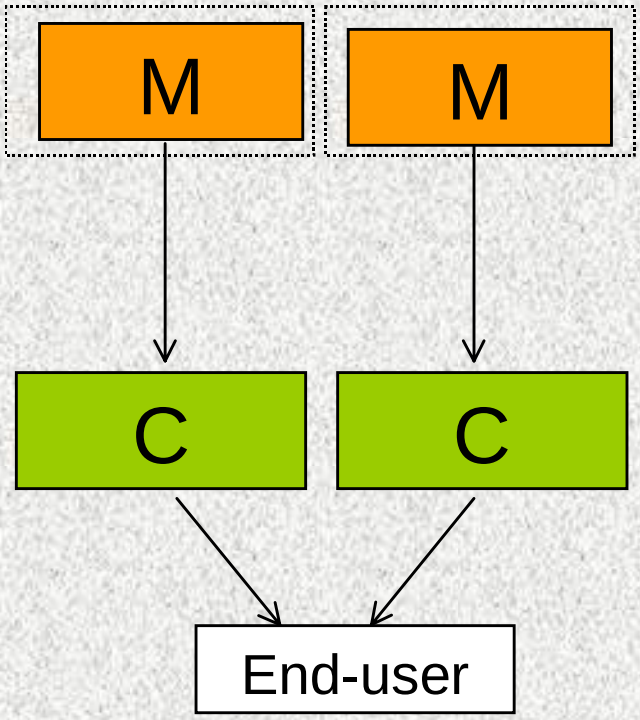

Structural approaches

- There is not just one structural approach but many…
  - Vertical ownership separation
  - Joint or club ownership
  - Sharing of the capacity of the natural monopoly facility
  - Separation into vertical integrated entities which require reciprocal access to each other…

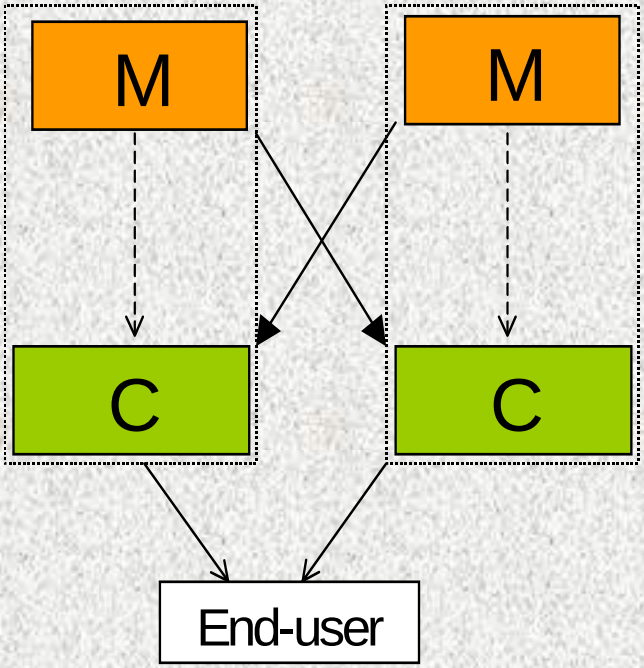

Structural approaches

- There is not just one structural approach but many…
  - Vertical ownership separation
  - Joint or club ownership
  - Sharing of the capacity of the NM facility
  - Separation into vertical integrated entities which require reciprocal access to each other…
- Conclusion: there is more than one way to skin this cat.

Structural approaches

- Examples of each of these approaches can easily be found:
  - Vertical ownership separation arises:
    - in the airline industry; in roads; in the electricity industry; rail (in NSW) in Australia
    - In telecommunications in the US (AT&T decision)
    - In rail in the US and Sweden

Structural approaches

- Examples of each of these approaches can easily be found:
  - Club ownership arises:
    - In the electricity industry (transmission) in the Netherlands
    - and the slot coordinator role at some airports

Structural approaches

- Examples of each of these approaches can easily be found:
  - Sharing capacity of monopoly facility:
    - In the US gas industry pipelines sell long-term rights to a share of the capacity of the pipeline
    - Canada (Alberta) and Ireland – Virtual independent power producers - Contracts for the output of dominant generators

Structural approaches

- Examples of each of these approaches can easily be found:
  - Separation into competing reciprocal parts:
    - In the rail industry of the US and Canada and (to an extent) Mexico
    - In the telecommunications industry in the US and (to an extent) in Europe.
  - Conclusion – structural approaches to the “access problem” are common
    - they are not rare or exceptional or a last resort

What about accounting or corporate separation?

- Accounting separation is better than nothing:
  - It may increase the information available to the regulator and may help detect and prevent a price squeeze or anticompetitive cross-subsidisation
- But it does not address the underlying incentives to restrict, prevent or deny access…
  - The regulator still has an uphill battle to ensure non-discriminatory access…

What about accounting or corporate separation?

- Allan Fels on the AS in telecommunications:
  - "However, we should be cautious in creating false expectations about this regime. There needs to be a clear understanding that accounting separation is not designed to, and cannot force, a change in a carrier's underlying incentives or conduct. The extent to which it improves the competitive environment therefore depends not only on the degree of transparency it provides, but also the other regulatory tools to respond to competition problems identified."
    - (speech to ATUG 6 March 2003)

What about accounting or corporate separation?

- Hardt, *Telecommunications Policy*, 1995:
  - "Theory predicts that … accounting separation has no effect on the dominating firm's behaviour, accounting separation does not effectively prevent discrimination of a competing network user, and accounting separation cannot effectively be used to promote entry either. In many ways accounting separation is not equivalent to structural separation. Although they look equivalent at first sight, their ways of functioning economically and their implications differ considerably"

Voluntary vertical separation?

- There are a few instances of companies choosing to voluntarily separate…
  - This arises when the integrated company is regulated more tightly than the non-integrated components
    - (e.g., when the regulated price for delivered gas is lower than the tariff the company could receive selling gas and pipeline services separately)
  - Separation can be induced by tightening retail regulation and loosening wholesale (access) regulation

Four “myths” of vertical structural separation

- Vertical separation in monopoly industries is *exceptional* or *rare* or a “*last resort*”;
- Vertical separation is *all* (full vertical ownership separation) *or nothing* at all;
- Accounting separation and corporate separation are equally effective alternatives;
- Vertical separation is always an involuntary act which must be forced on the regulated firm;